Surgical Technique

smith&nephew

LEGION®

Cones

LEGION® Cones
Surgical Technique

Contents

Indications

The LEGION Cones System is intended to be used with the LEGION Revision and LEGION Hinge knee systems. The LEGION Cones are indicated for the following:

1. Rheumatoid arthritis
2. Post-traumatic arthritis, osteoarthritis, or degenerative arthritis.
3. Failed osteotomies, unicompartmental replacement, or total knee replacement.
4. Posterior stabilized knee systems are designed from use in patients in primary and revision surgery, where the anterior and posterior cruciate ligaments are incompetent and the collateral ligaments remain intact.
5. Constrained knee systems are designed for use in patients in primary and revision surgery, where the posterior cruciate ligament and one or both of the collateral ligaments (i.e. medial collateral and/or lateral collateral ligament) are incompetent.
6. Hinge knee systems are designed for use in patients in primary and revision surgery, where the posterior cruciate ligament and one or both of the collateral ligaments (i.e. medial collateral and/or lateral collateral ligament) are absent or incompetent.

These are single use implants and are intended for use with and without bone cement.

Nota bene

The technique description herein is made available to the healthcare professional to illustrate the suggested treatment for the uncomplicated procedure. In the final analysis, the preferred treatment is that which addresses the needs of the patient.

Introduction

The standard LEGION® Tibial Cones surgical technique is provided in the first section followed by the standard Femoral Cones surgical technique in the second section. Two additional tibial surgical technique variations are provided in the Appendix to maximize the benefits of using LEGION Cones.

Tibial Cone usage with Offset Couplers is often associated with Pressfit Stems. In this technique, emphasis is placed on controlling the placement of the Cone's internal diameter relative to an intramedullary stem location and the Tibial Tray location.

The Appendix contains additional techniques for Tibial Cone usage without Offset Couplers, as seen more commonly with the use of Cemented Stems. These techniques will take advantage of the size of the Cone's internal diameter to maximize the Cone's positional flexibility.

The labeled sizes of the LEGION Cones are the functional internal diameters (ID). The IDs are relative to the functional diameters of LEGION Press-Fit Stems including the 1mm diametrically oversized cutting flutes. For example, a size 22 ID LEGION Tibial Cone can accept up to a 22mm LEGION Press-Fit Stem without offset.

Figure 1

Figure 2

LEGION Cone Handle Description

All cone surgical techniques utilize the Cone Handle (Figure 1). The Cone Handle fits over the LEGION Revision Reamers or LEGION Trial Stem Connection Rod and positions the broaches, trials and final implants in the proper positioning. Various Cone Handle Sleeves are inserted into the Cone Handle and oriented depending on the surgical technique being utilized.

Seven Cone Handle Sleeves provide the variable positioning control of the Cone Handle, which allows the variations in surgical techniques for the tibia. The Neutral Sleeve (Figure 2) aligns the Cone Handle directly to the intramedullary canal. This sleeve is used in the standard Femoral Cone technique and the Tibial Cone without Offset Couplers technique in the Appendix.

For Tibial Cones with Offset Couplers, the 2mm, 4mm and 6mm Offset Sleeves (Figure 3) are used. These sleeves mimic the positioning of the Offset Bushings in the LEGION RK and LEGION HK surgical techniques.

In the Variable Positioning Technique, the 2mm, 4mm and 6mm Variable sleeves (Figure 4) are utilized to provide additional positioning freedom with Tibial Cones without the use of offset couplers.

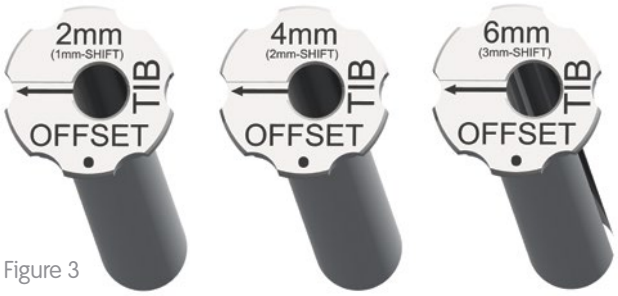

Figure 3

Figure 4

Cone Handle Assembly

Insert the desired sleeve into the Cone Handle (Figure 5 and 6). Press the Sleeve capture button (Figure 6a) to release the sleeve for orientation or removal. The Cone Handle Offset Sleeves have an orientation arrow to align to the appropriate clocking line (Figure 6b) on the Cone Handle referencing the clocking position of the Tibial Sizing guide from the LEGION® RK/HK technique.

Figure 5

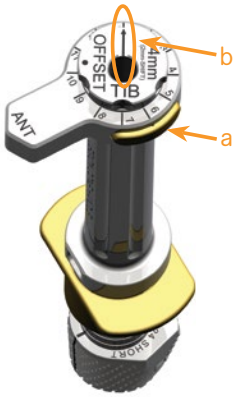

Figure 6

Cone Handle – Broach Assembly

On the bottom end of the Cone Handle, align the gold locking pin to the selected broach (Figure 7). Retract the gold slide (Figure 8a) and engage the Cone Handle with the Broach (Figure 8b). Rotate the Broach a ¼ turn following the black line (Figure 9). Release the gold slide (Figure 10).

Note: The Cone Broach Handle will only engage in the direction described above.

To remove the Broach, reverse this method by retracting the gold slide and reversing the ¼ turn following the black line.

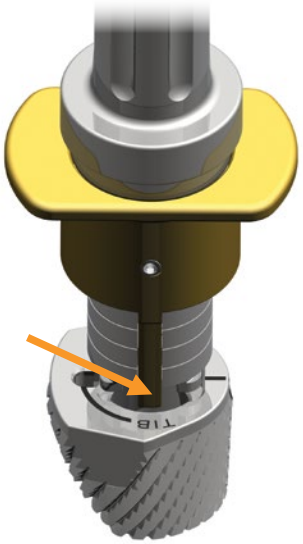

Figure 7

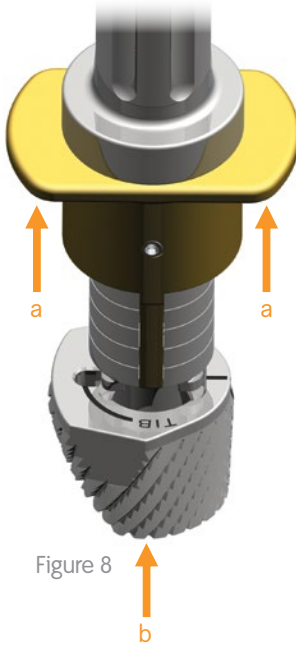

Figure 8

Figure 9

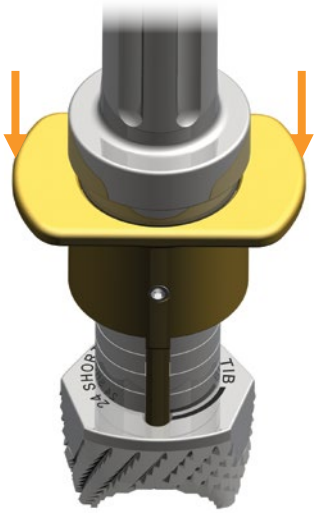

Figure 10

Cone Handle Alignment

The Cone Handle rotational alignment platform indicates the anterior direction for both LEGION® Tibial and Femoral Cones (Figure 11a). Additionally, a LEGION Quick ConnecT-Handle and optional drop rod can be used for anterior alignment of the Cone Handle (Figure 11).

A maximum of 25° of rotational freedom is provided between the Tibial Cone and the Tibial Tray fins/keel with no offset. Using offsets or variable positioning reduces the amount of rotational freedom.

A maximum of 20° of rotational freedom is provided between the Femoral Cone and the Femoral component's anterior flange (Figure 12). Offset Coupler usage is independent from this freedom on Femoral Cones.

Figure 11

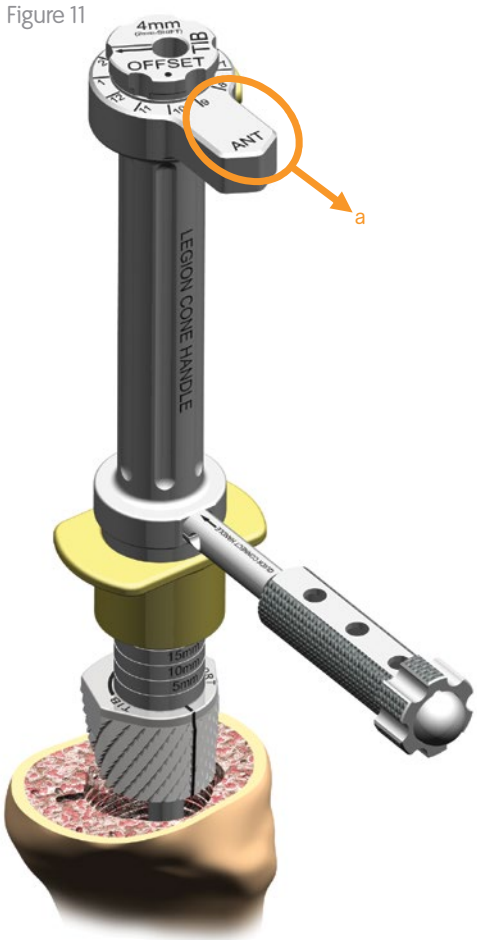

Figure 12

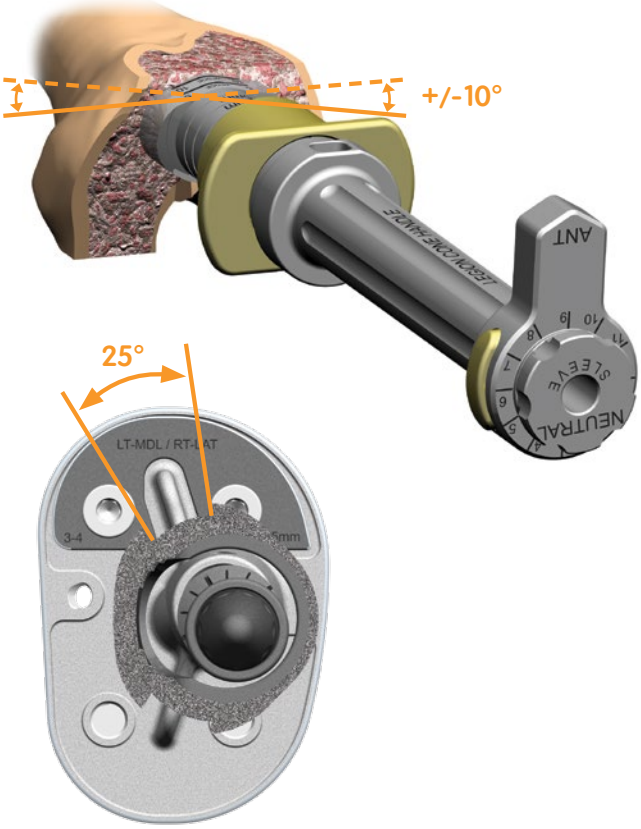

Trial and Implant deployment

The LEGION® Cone Handle is designed to deploy both the Tibial and Femoral Cone Trials and Implants. Separate Tibial and Femoral Cone Impactor Heads (Figure 13, 14 respectively) are used with the LEGION Cone Handle to connect to and control orientation of the Tibial and Femoral Cone Trials and Implants.

The Impactor Heads assemble to the Cone Handle in the same ¼ turn locking method as the broaches (Figure 15). The Cone Trials and Implants snap onto the Impactor Heads.

Figure 13

Figure 14

Figure 15

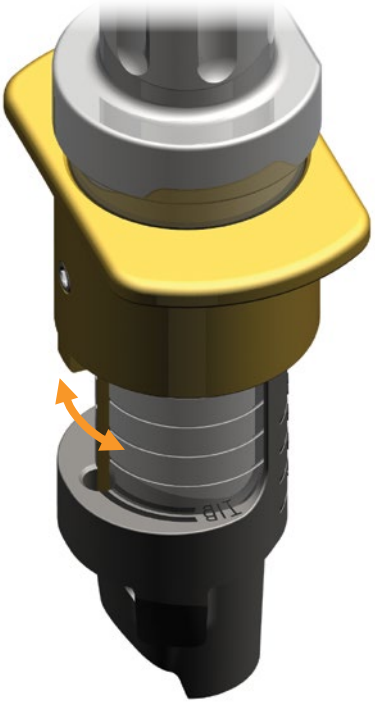

Tibial Cones Surgical Technique

The LEGION® Tibial Cones were designed to be used with the LEGION Revision (RK) and LEGION Hinge (HK) Tibial Baseplates and the range of offset couplers. There is a maximum of 25° of rotational freedom between the Tibial Baseplate fins and the Tibial Cone.

If utilizing offset couplers, reference the below sizing guide and the following technique.

Minimum Tibial Cone Size with Offset Couplers

Note: The labeled sizes of the LEGION Cones are the functional internal diameters (ID). The IDs are relative to the functional diameters of LEGION Press-Fit Stems including the 1mm diametrically oversized cutting flutes. For example, a size 22 ID LEGION Tibial Cone can accept up to a 22mm LEGION Press-Fit Stem without offset.

1. With the offset amount and Stem size desired, reference the chart for the minimum Tibial Cone Size needed to accommodate the desired implant construct.

		Stem Diameter				
		<18	18	20	22	24
Max Offset	0	18	18	20	22	24
	2mm	20	20	22	24	26
	4mm	22	22	24	26	28
	6mm	24	24	26	28	30
		Minimum Tibial Cone Size				

2. To calculate the minimum Cone internal diameter needed, add the Stem size or 18mm (whichever is greater) to the desired offset.

Example: If you have used a 22mm reamer with a 4mm offset coupler, the minimum size Tibial Cone required (or larger) is 26.

Example: If a 15mm Reamer is used with a 2mm offset, the minimum size Cone required is 20. 18 is greater than the 15mm Reamer, therefore 18+2 = 20 minimum.

Tibial Preparation

Follow the standard surgical technique for either LEGION® Revision (RK) or LEGION Hinge (HK) through tibial reaming, proximal resection, and tibial sizing and offset placement, noting stem/reamer size, length and the offset amount and clocking orientation. Before the tibial tray counterbore step, determine the maximum Cone size needed to fill the defect to ensure the desired offset is compatible.

Tip: Hemi-wedge resections can be performed using the Distal Femoral Cutting Block (Figure 18). Completing these resection(s) prior to Cone preparation assists in determining minimum Cone depth requirements.

Figure 16

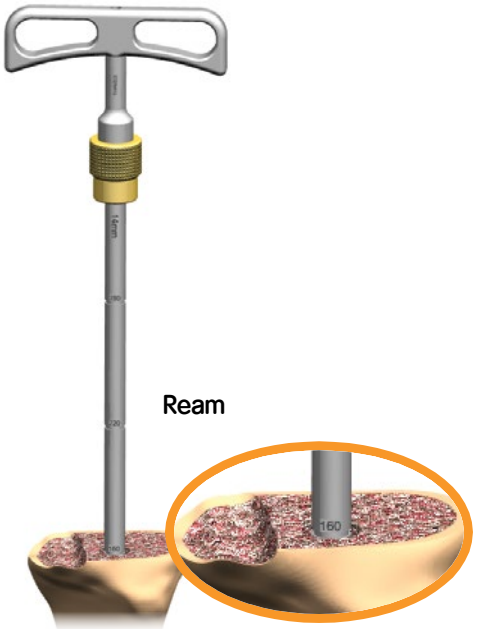

Figure 17

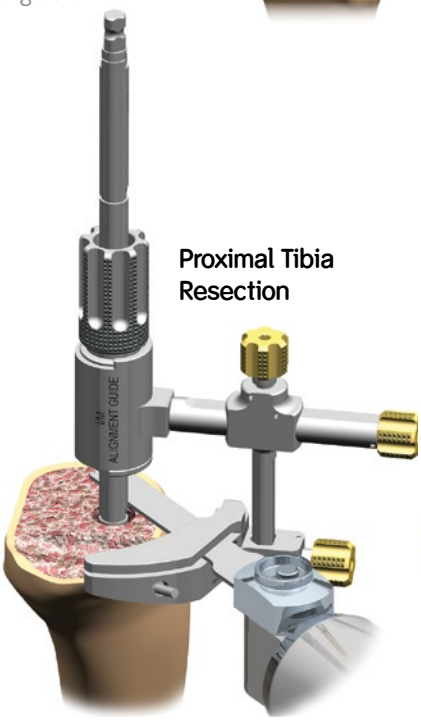

Figure 18

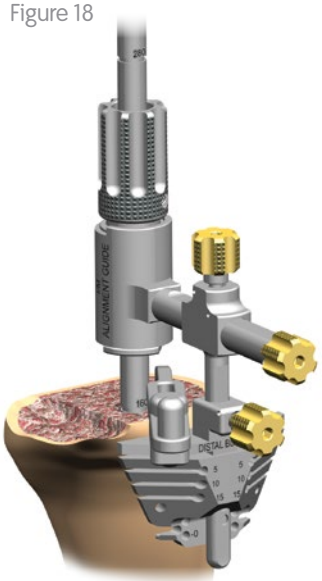

Figure 19

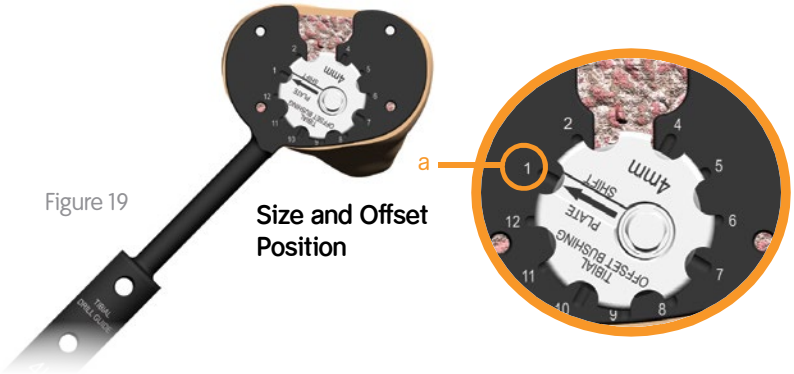

Initial Ream

1. With the LEGION® Reamer (or Trial Stem and Trial Stem Connection Rod) remaining in the canal, place the Initial Cone Reamer over the shaft of the Reamer (Figure 20) and ream to the short or long depth markings depending on Tibial Cone length desired.

   Note: The depth should be below any additional hemi-augments planned.

   Note: There are two lengths of Tibial Cones, Short (25mm) and Long (40mm). The minimum depths are represented in Figure 20 on the Initial Reamer.

Figure 20

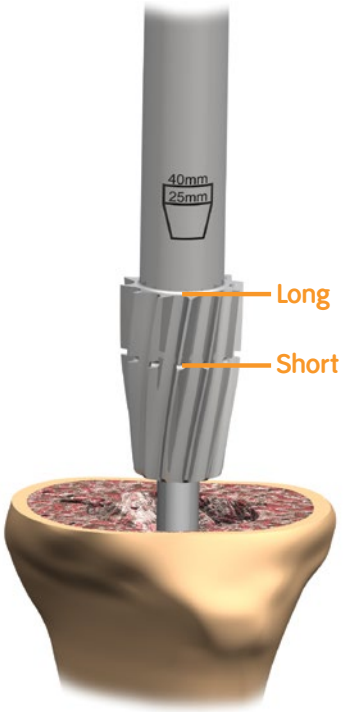

Initial Cone Handle Assembly

1. Insert the appropriate Offset Tibial Cone Sleeve into the Cone Broach Handle oriented to the same clock position as with the Offset Bushing and Tibial Drill Guide (Figure 21), and lock in place.

Figure 21

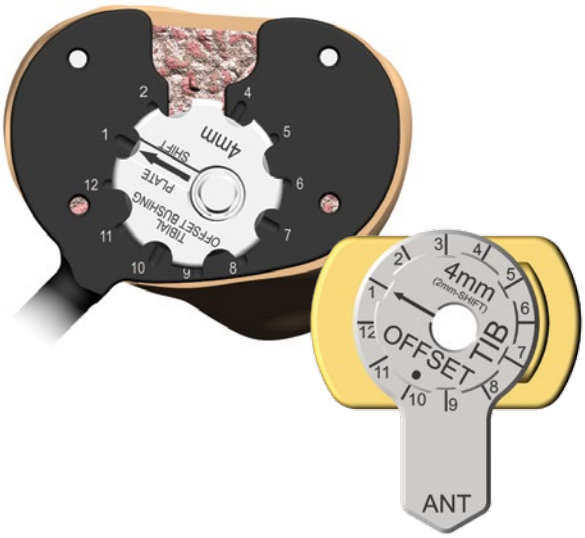

Cone Sizing

1. Invert and place the minimum size Tibial Cone Broach that covers the defect over the Reamer shaft (Figure 22).

   Tip: Ensure the anterior mark on the Cone Broach faces anterior (Figure 22a).

2. With the minimum size Tibial Cone Broach inverted, assemble the Cone Handle with the desired Offset Sleeve over the Reamer. Position the inverted broach assembly in the desired orientation (Figure 23).

3. If the selected minimum size Tibial Cone Broach with the desired offset covers or is smaller than the defect, proceed with sequential broaching using the selected Cone Offset Sleeve and Cone Handle Assembly.

   If the cone size is larger than desired or than the anatomy allows, reassess tray coverage with a reduced amount of offset and repeat the Minimum Cone Size evaluation and subsequent Cone Sizing steps.

4. Once a minimum Tibial Cone size, including an offset amount and orientation, are determined, complete the LEGION® Counterbore steps from the standard LEGION RK or LEGION HK surgical technique (Figures 24 and 25).

Figure 22

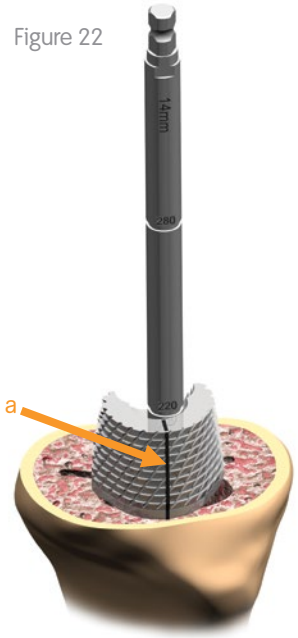

Figure 23

Figure 24

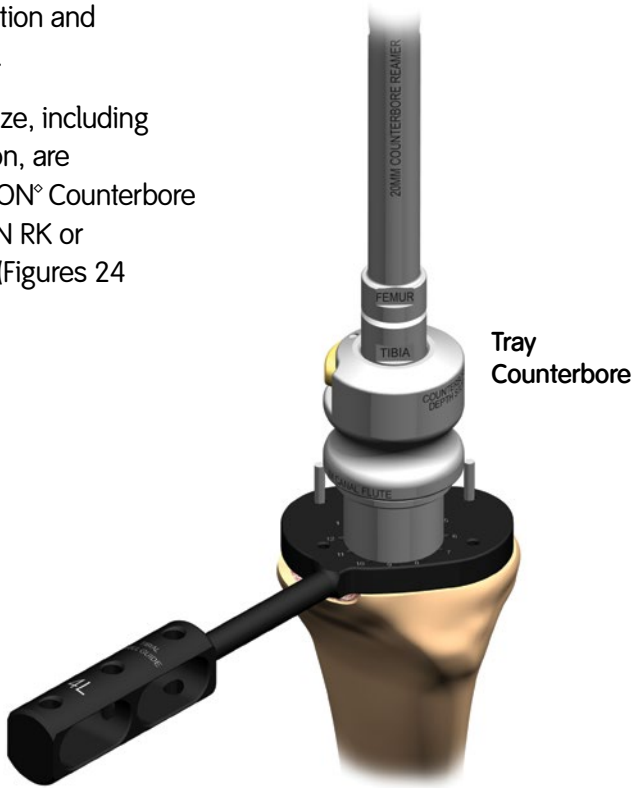

Figure 25

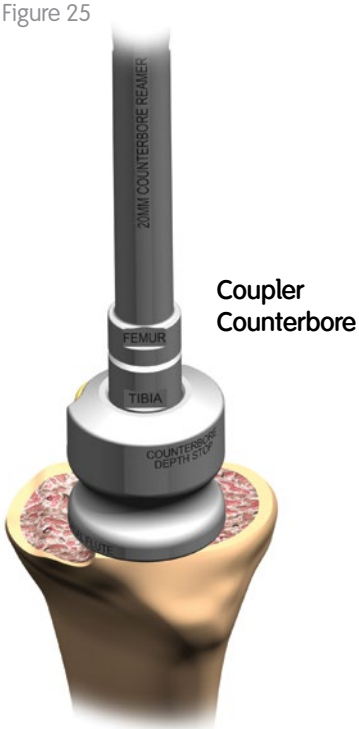

Sequential Broaching

1. With the LEGION® Reamer (or Trial Stem and Trial Stem Connection Rod) remaining in the canal, place the Cone Handle with appropriate offset sleeve assembled with the 18mm Tibial Broach of the desired length, 'Short' or 'Long', over the shaft of the Reamer (Figure 26).

   Note: A maximum of 25° of rotational freedom is provided between the Tibial Cone and the Tibial Tray fins/keel with no offset. Using offsets reduces the amount of rotational freedom.

2. With attention to rotational alignment, lightly impact the Cone Handle Assembly with a mallet until the desired depth is reached (Figure 27).

   Caution: *If excessive force is used, fracture may occur. It is advised to broach in and out to relieve stresses on the bone.*

   Note: The depth should be at or below the cut tibial surface including below any additional hemi augments planned.

   Tip: 5mm depth marks are provided on the Cone Handle for additional depth referencing against planned augment thickness (Figure 27a).

3. While utilizing the same alignment orientation as the previous broach, sequentially broach with the next larger size until the desired size and stability is reached.

Figure 26

Figure 27

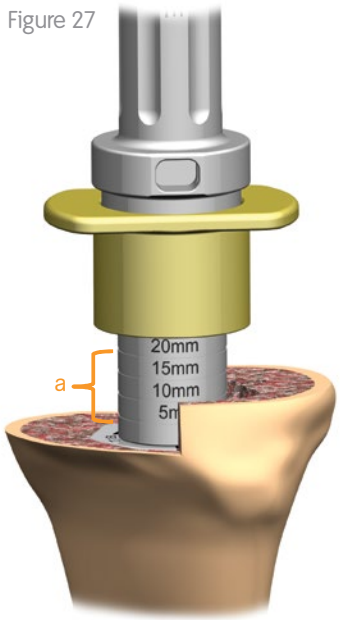

Tibial Cone Trialing

1. Remove the last Tibial Cone Broach from the Cone Handle, noting the broach size and length, and assemble the corresponding size Tibial Cone Impactor Head and Tibial Cone Trial (Figure 28).

2. Insert the Cone Trial into the prepared tibia utilizing the same alignment orientation as the previous broach (Figure 29).

   Note: The Tibial Cone Trials are the same external size as their corresponding Tibial Cone Broaches, therefore, little to no impaction should be required for the Tibial Cone Trial placement.

3. Complete the remaining steps in the LEGION® RK or LEGION HK surgical technique after the Counterbore section up to Implant Assembly (i.e. trial placement, trial ROM, set rotation, fin punch and hemi-augment resections if not previously completed).

Figure 28

Figure 29

Cone Trial Removal

1. Insert the cone removal tool into the trial until the hooks are just past the distal edge of the trial. Attach the T-Handle to the removal tool (Figure 30a) and rotate until the arms expand to grip the Cone Trial.

2. Attach the Slap Hammer to the Cone Removal Tool and remove the Cone Trial (Figure 30b).

Figure 30

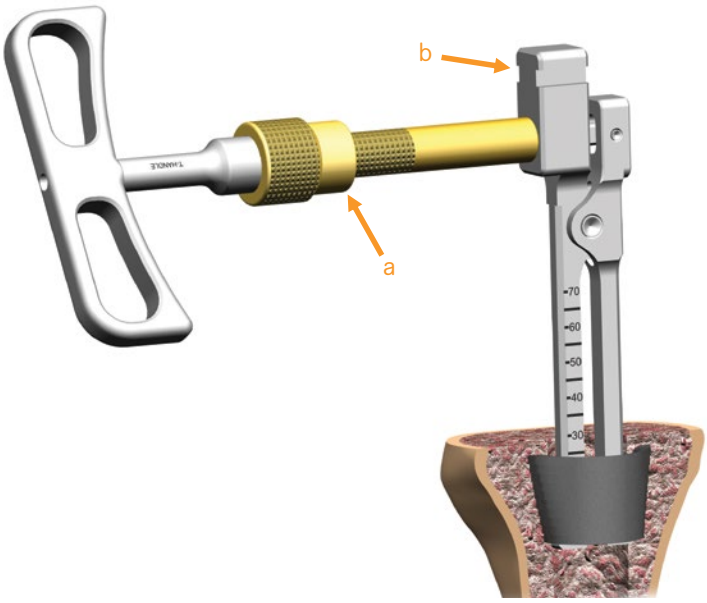

Tibial Cone Implantation

1. To insure proper Cone Implant placement and orientation, insert the appropriate LEGION® Reamer (or Trial Stem and Trial Stem Connection Rod Assembly) into the canal.

   Caution: *Without LEGION Reamer or Trial Stem/Trial Stem Connection Rod in the canal, the final cone implant may be malaligned.*

2. Assemble the previously used Tibial Cone Impactor Head and Offset Sleeve to the Cone Handle maintaining the same clocking orientation.

3. Using the previous orientation used with the final Tibial Cone Broach and Tibial Cone Trial, lightly impact the selected Cone Implant into the Tibia to the desired depth and orientation (Figure 31).

   Caution: *If excessive force is used, fracture may occur.*

   Tip: After the Cone implant is placed, fill any existing voids between the Cone and the endosteal of the tibia with grafting material (Figure 32).

Figure 31

Figure 32

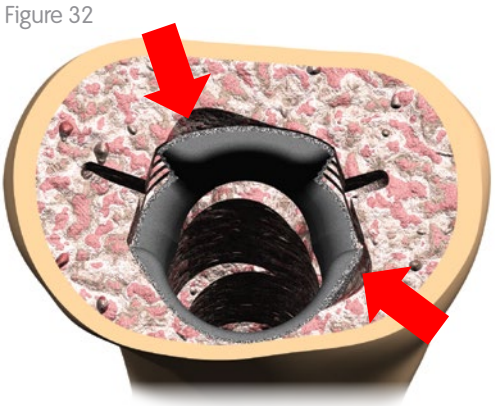

Cementing

1. If using a hybrid cementing technique, ensure a sufficient amount of cement is applied to Tibial Tray/Stem Implant construct to fill the area between the Cone's internal diameter and the Tibial Tray/Stem Implant Assembly prior to insertion of the Tibial Tray/Stem Implant Assembly.

   Tip: A final depth measurement of the cone can be taken using the Cone Removal Tool (Figure 33a) and transferred to the implant construct (Figure 34a).

Figure 33

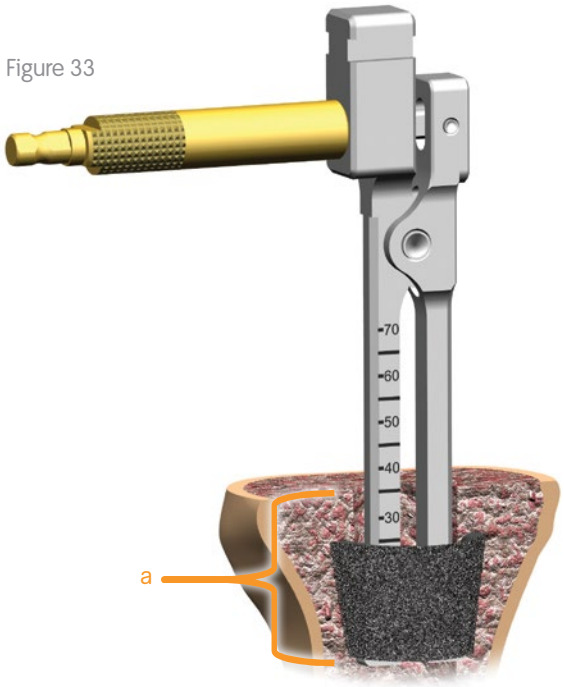

Figure 34

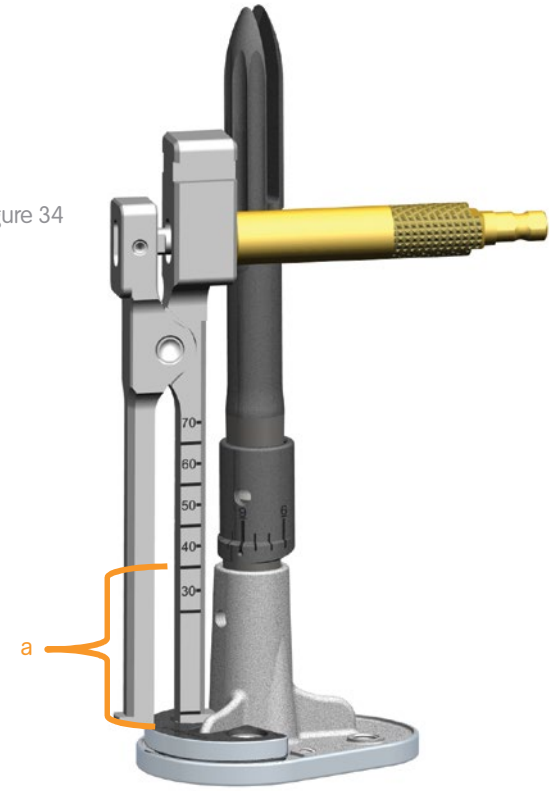

Femoral Cones Surgical Technique

The LEGION® Femoral Cones were designed to be used with the LEGION Constrained Femoral Component or the LEGION HK femoral component and the complete range of offset couplers depending upon the stem size, offset needed and the Femoral Cone size permitted by the anatomy.

There is a maximum of 20° of rotational freedom between the anterior flange of the Femoral Component and the Femoral Cone (+/- 10° each side).

The ability to offset is built into the Femoral Cone instead of in the instrumentation. Depending on stem size and cone size, there is the ability to offset up to 6mm between 3 and 9 o'clock. Reference the sizing guide below to determine which size cone can accommodate the various levels of offset.

Minimum Femoral Cone Size with Offset Couplers

Note: The labeled sizes of the LEGION Cones are the functional internal diameters (ID). The IDs are relative to the functional diameters of LEGION Press-Fit Stems including the 1mm diametrically oversized cutting flutes. For example, a size 22 ID LEGION Femoral Cone can accept up to a 22mm LEGION Press-Fit Stem without offset.

1. With the offset amount and Stem size desired, reference the chart for the minimum Femoral Cone Size needed to accommodate the desired implant construct.

Example: If you have used a 22mm reamer with a 6mm offset coupler, the minimum size Femoral Cone required is 24.

Minimum Femoral Cone Size (per offset)		
Max Offset	0	18
	2mm	20
	4mm	22
	6mm	24

Femeral Preparation

Follow the standard surgical technique for either LEGION® Revision (RK) or LEGION Hinge (HK) through the femoral reaming (Figure 35) and distal resection, including any distal wedge resections, noting stem/reamer size and length.

Tip: Although distal hemi-augment resections can be performed using the Femoral Trials, completing these resection(s) prior to Cone preparation assists in determining minimum Cone depth requirements (Figure 36).

Figure 35

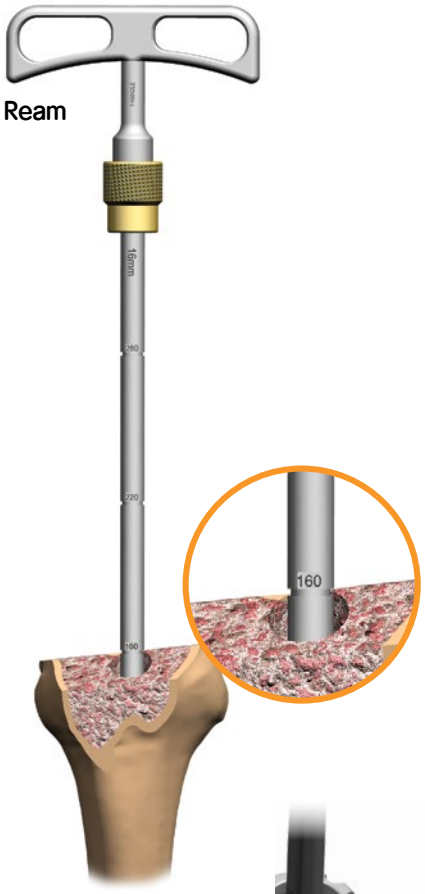

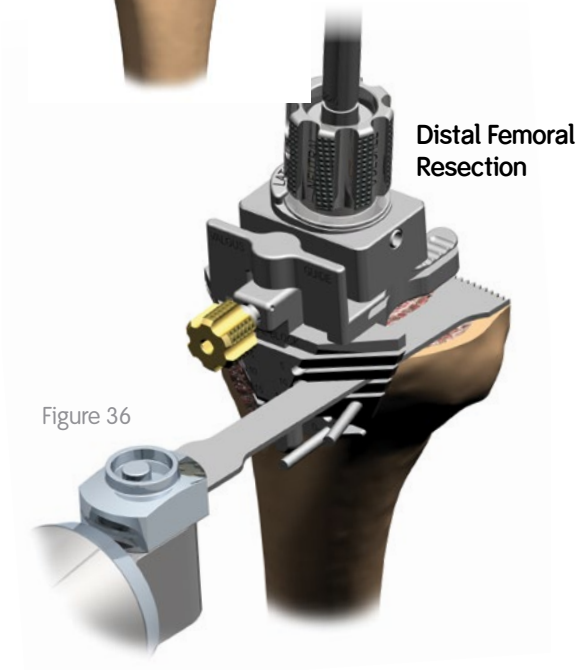

Figure 36

Initial Ream

1. With the LEGION® Reamer (or Trial Stem and Trial Stem Connection Rod) remaining in the canal, place the Initial Femoral Cone Reamer over the shaft of the LEGION Reamer (Figure 37). Ream to the desired depth.

   Note: The minimum femoral depth mark on the Initial Reamer (Figure 44b) should be at or below the primary distal resection (Figure 37a).

   Note: Depth accommodations should be considered when using distal augments.

Figure 37

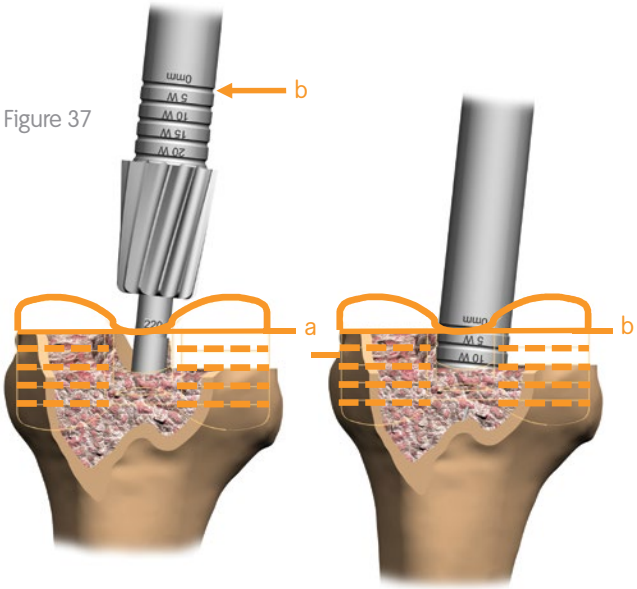

Sequential Broaching

1. Assemble the Neutral Sleeve into the Cone Broach Handle. Assemble the 18mm Femoral Broach onto the Cone Handle.

2. Rotationally align the anterior references of the Cone Handle anteriorly (Figure 38a).

   Note: Medial/Lateral reference lines are on the Femoral Broaches, Trials and Implants for additional rotational referencing.

3. Visually verify the anterior cone flange surfaces surfaces are within +/- 10° of the femoral component's anterior flange/resection (Figure 38).

Figure 38

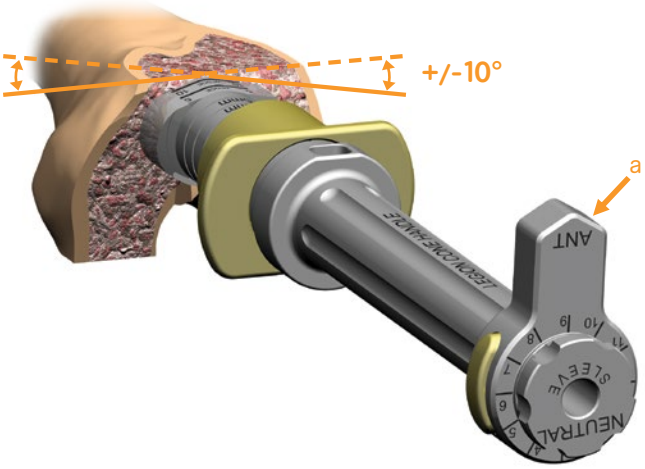

Sequential Broaching *continued*

Caution: *If excessive force is used, fracture may occur. It is advised to broach in and out to relieve stresses on the bone.*

4. With attention to rotation, lightly impact the Cone Handle Assembly with a mallet until the desired depth is reached.

   Tip: 5mm Depth marks are provided on the Cone Handle for additional canal depth referencing (Figure 39a) when a deeper cone position is required.

   Tip: If distal augments are used on both the medial and lateral condyles broach until the corresponding augment reference line on the Femoral Broaches (Figure 39b) aligns with the distal cut surface.

   For example, if no wedge is present on the lateral side and a 10mm wedge is present on the medial side, broach to the depth shown in Figure 39.

5. While utilizing the same alignment orientation as the previous broach, sequentially broach with the next larger size until the desired size and stability is reached.

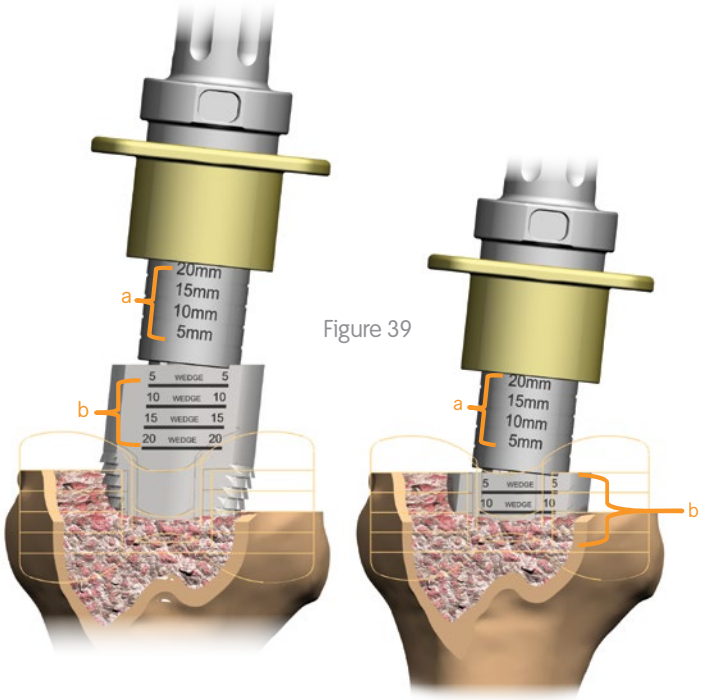

Figure 39

Femoral Cone Trial

1. Remove the last Femoral Cone Broach from the Cone Handle, noting the broach size and assemble the corresponding size Femoral Cone Impactor Head and Femoral Cone Trial.

   Note: The Femoral Cone Impactor Heads are symmetric and have the same depth markings as the Femoral Broaches on the medial side (Figure 40b).

2. Insert the Cone Trial into the prepared femur utilizing the same alignment orientation and canal depth referencing on the Cone Handle Assembly (Figure 40a).

   Note: The Femoral Cone Trials are the same external size as their corresponding Femoral Cone Broaches, therefore, little to no impaction should be required for the Femoral Cone Trial placement.

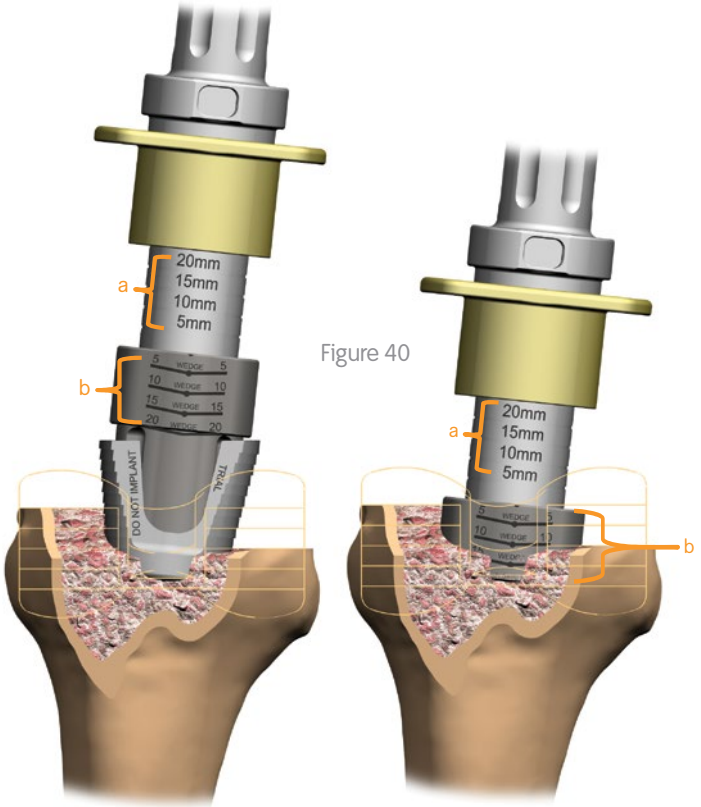

Figure 40

Offset Assessment

1. Utilizing the Femoral Cone Trial size deployed, reference the chart below for the maximum allowable offset. With the maximum offset limit in mind and the limited Offset Coupler orientation for LEGION® Femoral Cones, 3 o'clock to 9 o'clock, return to the standard surgical technique for LEGION RK or LEGION HK (Figure 41).

Minimum Femoral Cone Size (per offset)		
Max Offset	0	18
	2mm	20
	4mm	22
	6mm	24

Figure 41

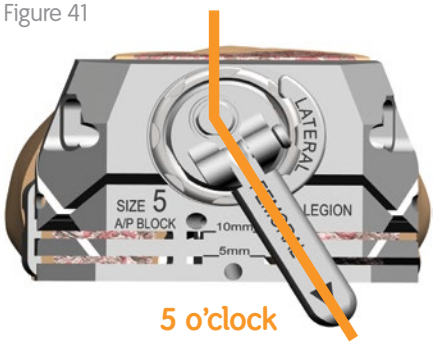

Size, Offset and Offset Orientation

Cone Trial Removal

1. Insert the cone removal tool into the trial until the hooks are just past the proximal edge of the trial. Attach the T-Handle to the removal tool (Figure 42a) and rotate until the arms expand to grip the Cone Trial.
2. Attach the Slap Hammer to the Cone Removal Tool and remove the Cone Trial (Figure 42b).

Figure 42

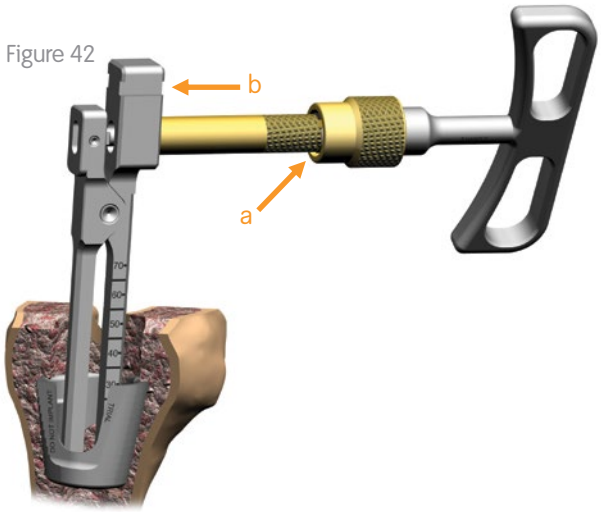

Femoral Cone Implant

1. To insure proper Cone Implant placement and orientation, insert the appropriate LEGION Reamer (or Trial Stem and Trial Stem Connection Rod Assembly) into the canal.

   Caution: *Without LEGION Reamer or Trial Stem/ Trial Stem Connection Rod in the canal, the final cone implant may be malaligned.*

2. Assemble the Neutral Sleeve and appropriate Femoral Cone Impactor Head to the Cone Handle.

   Caution: *If excessive force is used, fracture may occur.*

3. Using the previous orientation and size used with the final Femoral Cone Broach and Femoral Cone Trial, lightly impact the selected Cone Implant into the femur to the previously determined depth and orientation.

   Tip: After the Cone implant is placed, fill any existing voids between the Cone and the endosteal of the femur with grafting material.

4. If using a hybrid cementing technique, ensure a sufficient amount of cement is applied the Femoral Implant construct to fill the area between the Cone's internal diameter and the Femoral Implant Assembly prior to insertion.

   Tip: A final depth measurement of the cone can be taken using the Cone Removal Tool (Figure 43a) and transferred to the implant construct (Figure 44a).

Figure 43

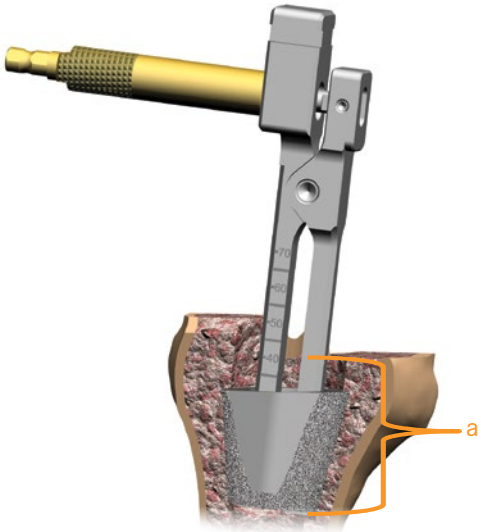

Figure 44

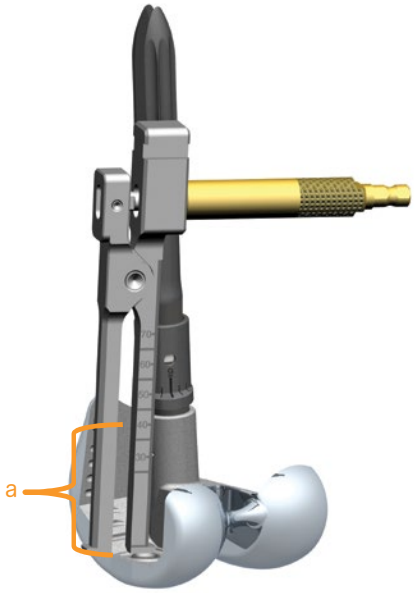

Appendix – A

Tibial Cones without Offset Couplers Surgical Technique

The LEGION® Tibial Cones were designed to be used with the LEGION Revision (RK) and LEGION Hinge (HK) Tibial Baseplates and the range of offset couplers. There is a maximum of 25° of rotational freedom between the Tibial Baseplate fins and the Tibial Cone.

If not utilizing offset couplers, reference the below sizing guide and the following technique.

Minimum Tibial Cone Size without Offset Couplers

The labeled sizes of the LEGION Cones are the functional internal diameters (ID). The IDs are relative to the functional diameters of LEGION Press-Fit Stems including the 1mm diametrically oversized cutting flutes. For example, a size 22 ID LEGION Tibial Cone can accept up to a 22mm LEGION Press-Fit Stem without offset.

Tibial Preparation

Follow the standard surgical technique for either LEGION® Revision (RK) or LEGION Hinge (HK) through tibial reaming, proximal resection, tibial sizing, and the tibial tray counterbore step(s) noting stem/reamer size and length.

Tip: Hemi-wedge resections can be performed using the Distal Femoral Cutting Block (Figure 47). Completing these resection(s) prior to Cone preparation assists in determining minimum Cone depth requirements.

Figure 45

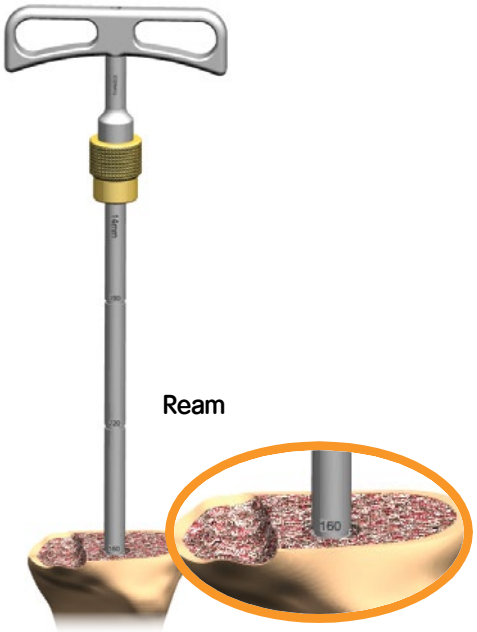

Figure 46

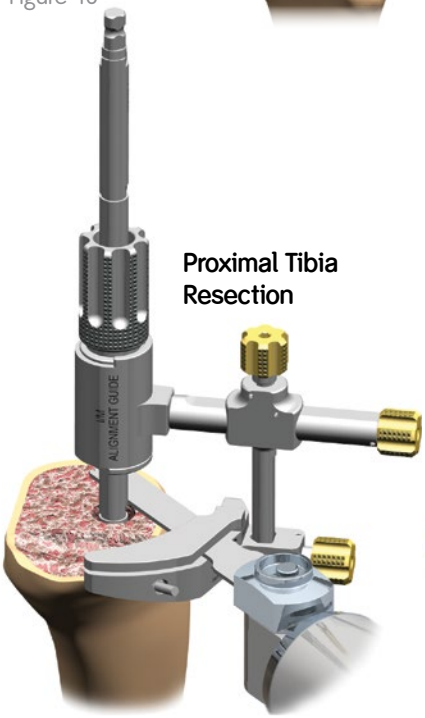

Figure 47

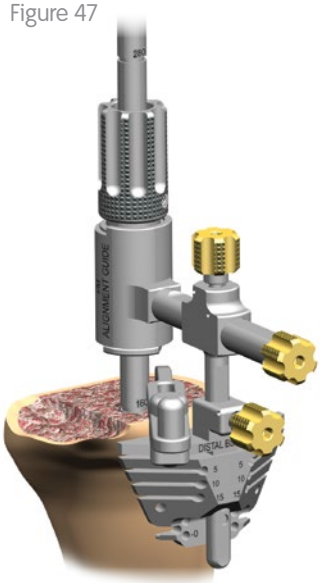

Figure 48

Tibial Sizing and Tibial Tray Counterbore Reaming

Initial Ream

1. With the LEGION® Reamer (or Trial Stem and Trial Stem Connection Rod) remaining in the canal, place the Initial Cone Reamer over the shaft of the LEGION Reamer (Figure 49) and ream to the short or long depth markings depending on Tibial Cone length desired.

   Note: The depth should be below any additional hemi-augments planned.

   Note: There are two lengths of Tibial Cones, Short (25mm) and Long (40mm). The minimum depths are represented in Figure 49 on the Initial Reamer.

2. Insert the Neutral Sleeve into the Cone Handle.

Figure 49

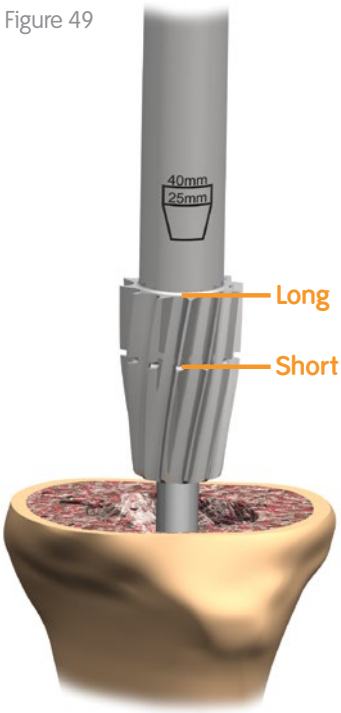

Sequential Broaching

1. Referencing the Initial Reamer depth, assemble the 18mm 'Short' or 'Long' Tibial Broach onto the Cone Handle.

2. With attention to rotational alignment, anterior reference facing anteriorly, lightly impact the Cone Handle Assembly with a mallet until the desired depth is reached.

   Caution: *If excessive force is used, fracture may occur. It is advised to broach in and out to relieve stresses on the bone.*

   Note: The depth should be at or below the cut tibial surface including below any additional hemi augments planned.

   Tip: 5mm depth marks are provided on the Cone Handle for additional depth referencing against planned augment thickness (Figure 51a).

2. While utilizing the same alignment orientation as the previous broach, sequentially broach with the next larger size until the desired size and stability is reached.

Figure 50

Figure 51

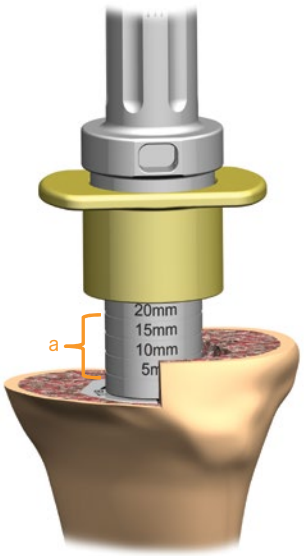

Tibial Cone Trialing

1. Remove the last Tibial Cone Broach from the Cone Handle, noting the broach size and length, and assemble the corresponding size Tibial Cone Impactor Head and Tibial Cone Trial (Figure 52).

2. Insert the Cone Trial into the prepared tibia utilizing the same alignment orientation as the previous broach.

   Note: The Tibial Cone Trials are the same external size as their corresponding Tibial Cone Broaches, therefore, little to no impaction should be required for the Tibial Cone Trial placement.

3. Complete the remaining steps in the LEGION® RK or LEGION HK surgical technique after the Counterbore section up to Implant Assembly (i.e. trial placement, trial ROM, set rotation, fin punch and hemi-augment resections if not previously completed).

Figure 52

Cone Trial Removal

1. Insert the cone removal tool into the trial until the hooks are just past the distal edge of the trial. Attach the T-Handle to the removal tool (Figure 53a) and rotate until the arms expand to grip the Cone Trial.

2. Attach the Slap Hammer to the Cone Removal Tool and remove the Cone Trial (Figure 53b).

Figure 53

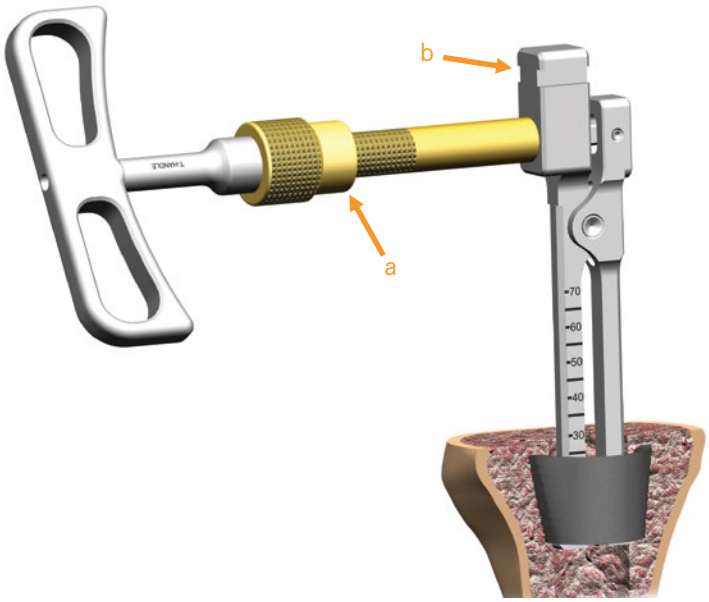

Tibial Cone Implantation

1. To insure proper Cone Implant placement and orientation, insert the appropriate LEGION® Reamer (or Trial Stem and Trial Stem Connection Rod Assembly) into the canal.

   Caution: *Without LEGION Reamer or Trial Stem/Trial Stem Connection Rod in the canal, the final cone implant may be malaligned.*

2. Assemble the Neutral Sleeve and appropriate Tibial Cone Impactor Head to the Cone Handle.

3. Using the previous orientation and size used with the final Tibial Cone Broach and Tibial Cone Trial, lightly impact the selected Cone Implant into the Tibia to the desired depth and orientation.

   Caution: *If excessive force is used, fracture may occur.*

   Tip: After the Cone implant is placed, fill any existing voids between the Cone and the endosteal of the tibia with grafting material (Figure 55).

Figure 54

Figure 55

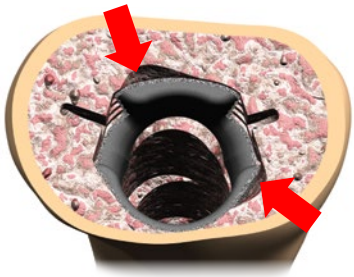

Cementing

1. If using a hybrid cementing technique, ensure a sufficient amount of cement is applied to Tibial Tray/Stem Implant construct to fill the area between the Cone's internal diameter and the Tibial Tray/Stem Implant Assembly prior to insertion of the Tibial Tray/Stem Implant Assembly.

   Tip: A final depth measurement of the cone can be taken using the Cone Removal Tool (Figure-56a) and transferred to the implant construct (Figure-57a).

Figure 56

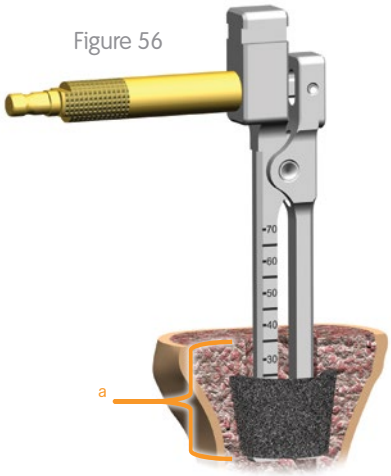

Figure 57

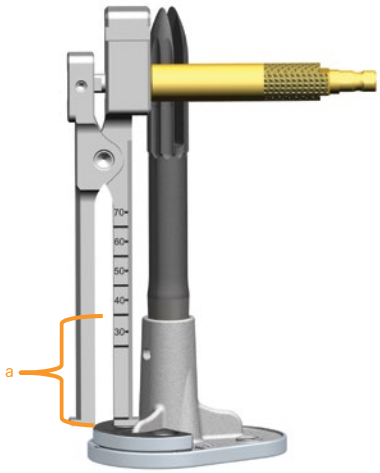

Appendix – B

Variable positioning of Tibial Cones without Offset Couplers Technique

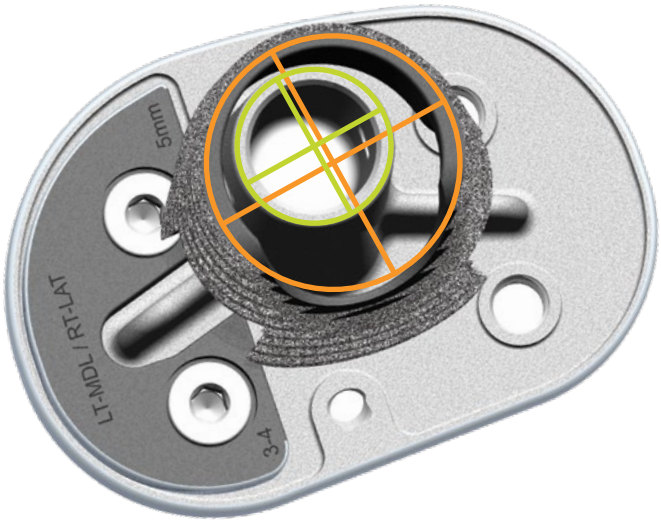

The LEGION® Tibial Cones were designed to be used with the LEGION Revision (RK) and LEGION Hinge (HK) Tibial Baseplates and the range of offset couplers. If no offset is desired, the Variable Positioning Technique allows the cone and the baseplate/stem construct to be moved independently of each other to maximize cone positioning anatomically. In this technique, the cone will be offset to maximally fill the defect while ensuring there is no conflict between the final baseplate/stem construct placement.

There is a maximum of 25° of rotational freedom between the Tibial Baseplate fins and the Tibial Cone.

If not utilizing offset couplers, reference the below sizing guide and the following technique.

Maximum Positional Freedom

Note: The labeled sizes of the LEGION Cones are the functional internal diameters (ID). The IDs are relative to the functional diameters of LEGION Press-Fit Stems including the 1mm diametrically oversized cutting flutes. For example, a size 22 ID LEGION Tibial Cone can accept up to a 22mm LEGION Press-Fit Stem without offset.

1. To calculate the maximum positional freedom for the estimated Cone size needed, subtract the Stem size or 18 (whichever is greater) from the desired Cone's functional internal diameter.

   Example: A 15mm Reamer (use the greater of Stem size or 18mm) and a 22 cone equates to 22-18 = 4mm maximum Variable Sleeve.

		Stem Diameter				
		<18	18	20	22	24
Variable Sleeve	0	18	18	20	22	24
	2mm	20	20	22	24	26
	4mm	22	22	24	26	28
	6mm	24	24	26	28	30
		Minimum Tibial Cone Size				

Tibial Preparation

Follow the standard surgical technique for either LEGION® Revision (RK) or LEGION Hinge (HK) through tibial reaming, proximal resection, tibial sizing, and the tibial tray counterbore step(s) noting stem/reamer size and length.

Tip: Hemi/wedge resections can be performed using the Distal Femoral Cutting Block (Figure 60). Completing these resection(s) prior to Cone preparation assists in determining minimum Cone depth requirements.

Figure 58

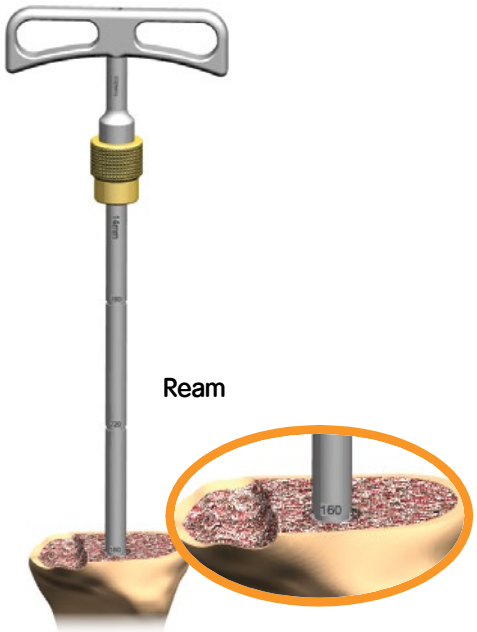

Figure 59

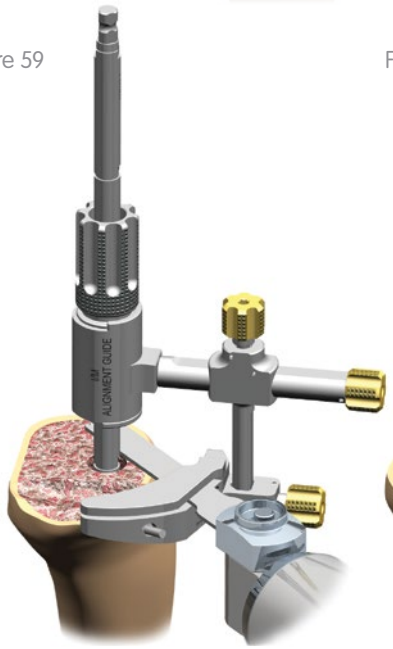

Figure 60

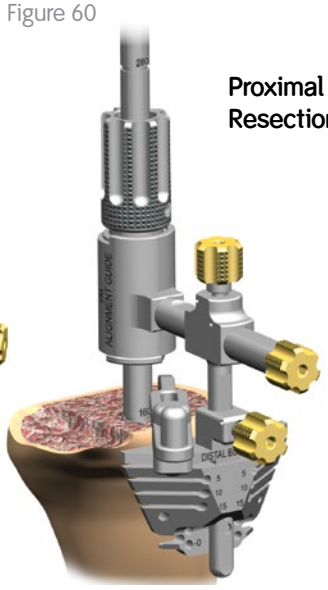

Figure 62

Initial Ream

1. With the LEGION® Reamer remaining in the canal, place the Initial Cone Reamer over the shaft of the Reamer (Figure 62) and ream to the short or long depth markings depending on Tibial Cone length desired.

   Note: The depth should be below any additional hemi-augments planned.

   Note: There are two lengths of Tibial Cones, Short (25mm) and Long (40mm). The minimum depths are represented in Figure 62 on the Initial Reamer.

Figure 62

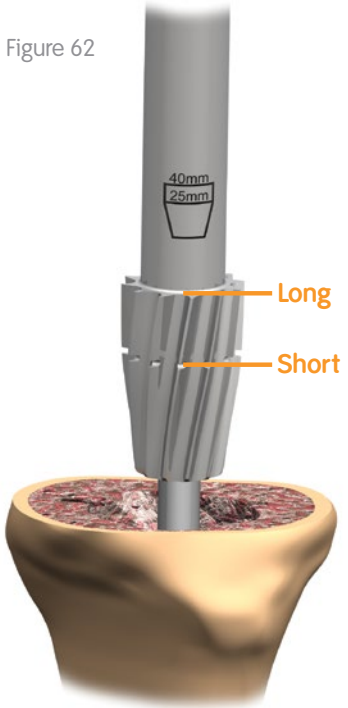

Cone Sizing

1. Invert and place the minimum size Tibial Cone Broach that covers the defect over the Reamer shaft.

   Tip: Ensure the anterior mark on the Cone Broach faces anterior (Figure 63a).

2. Referencing the chart, choose the correlating Variable Sleeve relative to the desired Stem size.

3. Variably position the inverted broach using the correlating Cone Variable Sleeve (Figure 63).

4. If the selected minimum size Tibial Cone Broach with the desired offset covers or is smaller than the defect, proceed with sequential broaching using the selected Cone Offset Sleeve and Cone Handle Assembly.

   Note: The labeled sizes of the LEGION Cones are the functional internal diameters (ID). The IDs are relative to the functional diameters of LEGION Press-Fit Stems including the 1mm diametrically oversized cutting flutes. For example, a size 22 ID LEGION Tibial Cone can accept up to a 22mm LEGION Press-Fit Stem without offset.

   Note: To calculate the maximum positional freedom for the estimated Cone size needed, subtract the Stem size or 18 (whichever is greater) from the desired Cone's functional internal diameter.

   Example: A 15mm Reamer (use the greater of Stem size or 18mm) and a 22 cone equates to 22-18 = 4mm maximum Variable Sleeve.

Figure 63

		Stem Diameter				
		<18	18	20	22	24
Variable Sleeve	0	18	18	20	22	24
	2mm	20	20	22	24	26
	4mm	22	22	24	26	28
	6mm	24	24	26	28	30
		Minimum Tibial Cone Size				

Sequential Broaching

1. With the LEGION® Reamer (or Trial Stem and Trial Stem Connection Rod) remaining in the canal, place the Cone Handle with appropriate Variable Offset Sleeve assembled with the 18mm Tibial Broach at the desired length, 'Short' or 'Long', over the shaft of the Reamer (Figure 64).

   Note: A maximum of 25° of rotational freedom is provided between the Tibial Cone and the Tibial Tray fins/keel with no offset. Using offsets reduces the amount of rotational freedom.

2. With attention to rotational alignment, lightly impact the Cone Handle Assembly with a mallet until the desired depth is reached.

   Caution: *If excessive force is used, fracture \may occur. It is advised to broach in and out to relieve stresses on the bone.*

   Note: The depth should be at or below the cut tibial surface including below any additional hemi augments planned.

   Tip: 5mm depth marks are provided on the Cone Handle for additional depth referencing against planned augment thickness (Figure 65a).

3. While utilizing the same alignment orientation as the previous broach, sequentially broach with the next larger size until the desired size and stability is reached.

Figure 64

Figure 65

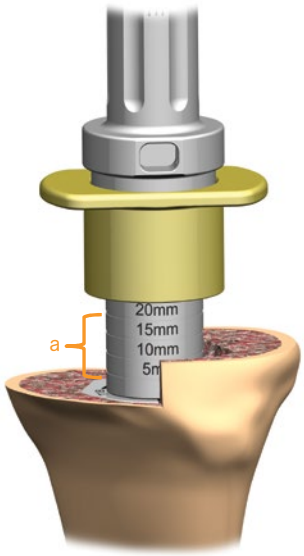

Tibial Cone Trialing

1. Remove the last Tibial Cone Broach from the Cone Handle, noting the broach size and length, and assemble the corresponding size Tibial Cone Impactor Head and Tibial Cone Trial (Figure 66).

2. Insert the Cone Trial into the prepared tibia utilizing the same alignment orientation as the previous broach.

   Note: The Tibial Cone Trials are the same external size as their corresponding Tibial Cone Broaches, therefore, little to no impaction should be required for the Tibial Cone Trial placement.

3. Complete the remaining steps in the LEGION® RK or LEGION HK surgical technique after the Counterbore section up to Implant assembly (i.e. trial placement, trial ROM, set rotation, fin punch and hemi-augment resections if not previously completed).

Figure 66

Figure 67

Cone Trial Removal

1. Insert the cone removal tool into the trial until the hooks are just past the distal edge of the trial. Attach the T-Handle to the removal tool (Figure 68a) and rotate until the arms expand to grip the Cone Trial.

2. Attach the Slap Hammer to the Cone Removal Tool and remove the Cone Trial (Figure 68b).

Figure 68

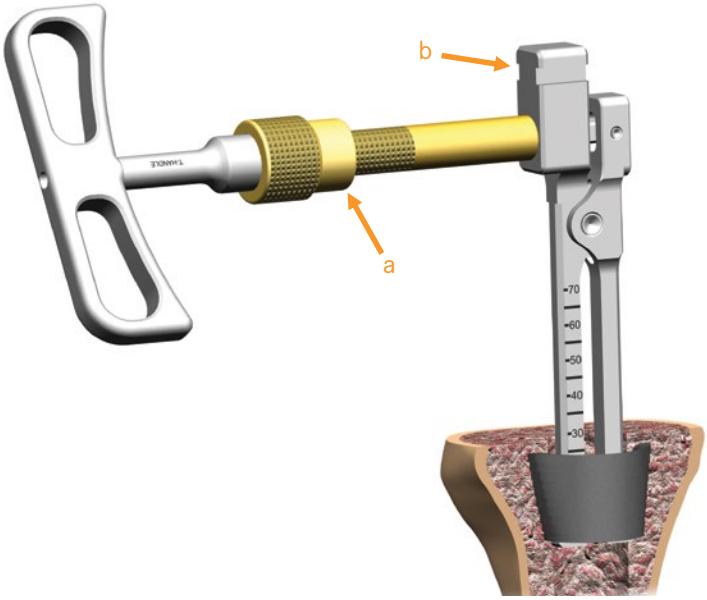

Tibial Cone Implantation

1. To insure proper Cone Implant placement and orientation, insert the appropriate LEGION Reamer (or Trial Stem and Trial Stem Connection Rod Assembly) into the canal.

   Caution: *Without LEGION Reamer or Trial Stem/Trial Stem Connection Rod in the canal, the final cone implant may be malaligned.*

2. Assemble the appropriate Variable Offset Sleeve and appropriate Tibial Cone Impactor Head to the Cone Handle.

3. Using the previous orientation and size used with the final Tibial Cone Broach and Tibial Cone Trial, lightly impact the selected Cone Implant into the Tibia to the desired depth and orientation.

   Caution: *If excessive force is used, fracture may occur.*

   Tip: After the Cone implant is placed, fill any existing voids between the Cone and the endosteal of the tibia with grafting material (Figure 70).

Figure 69

Figure 70

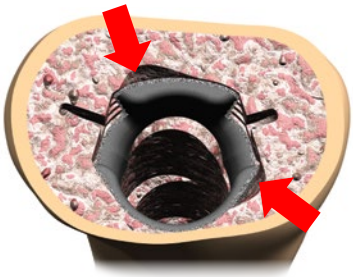

Cementing

1. If using a hybrid cementing technique, ensure a sufficient amount of cement is applied to Tibial Tray/Stem Implant construct to fill the area between the Cone's internal diameter and the Tibial Tray/Stem Implant Assembly prior to insertion of the Tibial Tray/Stem Implant Assembly.

   Tip: A final depth measurement of the cone can be taken using the Cone Removal Tool (Figure 71a) and transferred to the implant construct (Figure 72a).

Figure 71

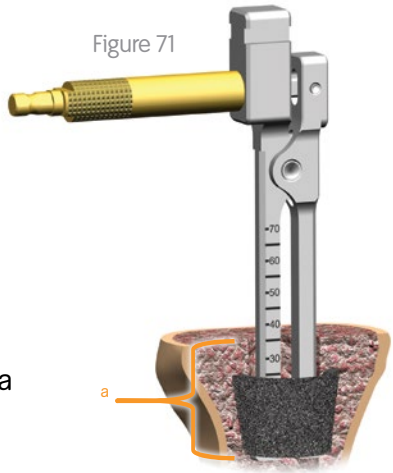

Figure 72

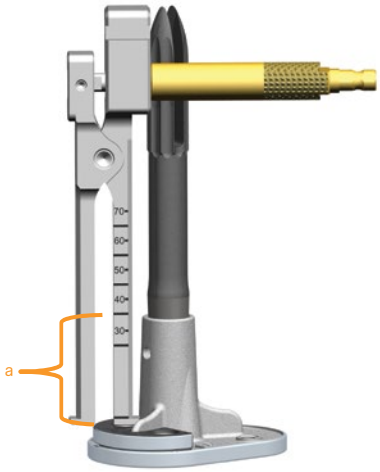

Notes

The following technique is for informational and educational purposes only. It is not intended to serve as medical advice. It is the responsibility of the treating physicians to determine and utilize the appropriate products and techniques according to their own clinical judgment for each of their patients. For more information on LEGION◊ Cones, including its indications for use, contraindications, and product safety information, please refer to the product's label and the Instructions for Use packaged with the product.

Smith & Nephew Inc.
1450 Brooks Road
Memphis, TN 38116
USA

www.smith-nephew.com

Telephone: 1-901-396-2121
Information: 1-800-821-5700
Orders and Inquiries: 1-800-238-7538

07366 71282143 V1 01/17